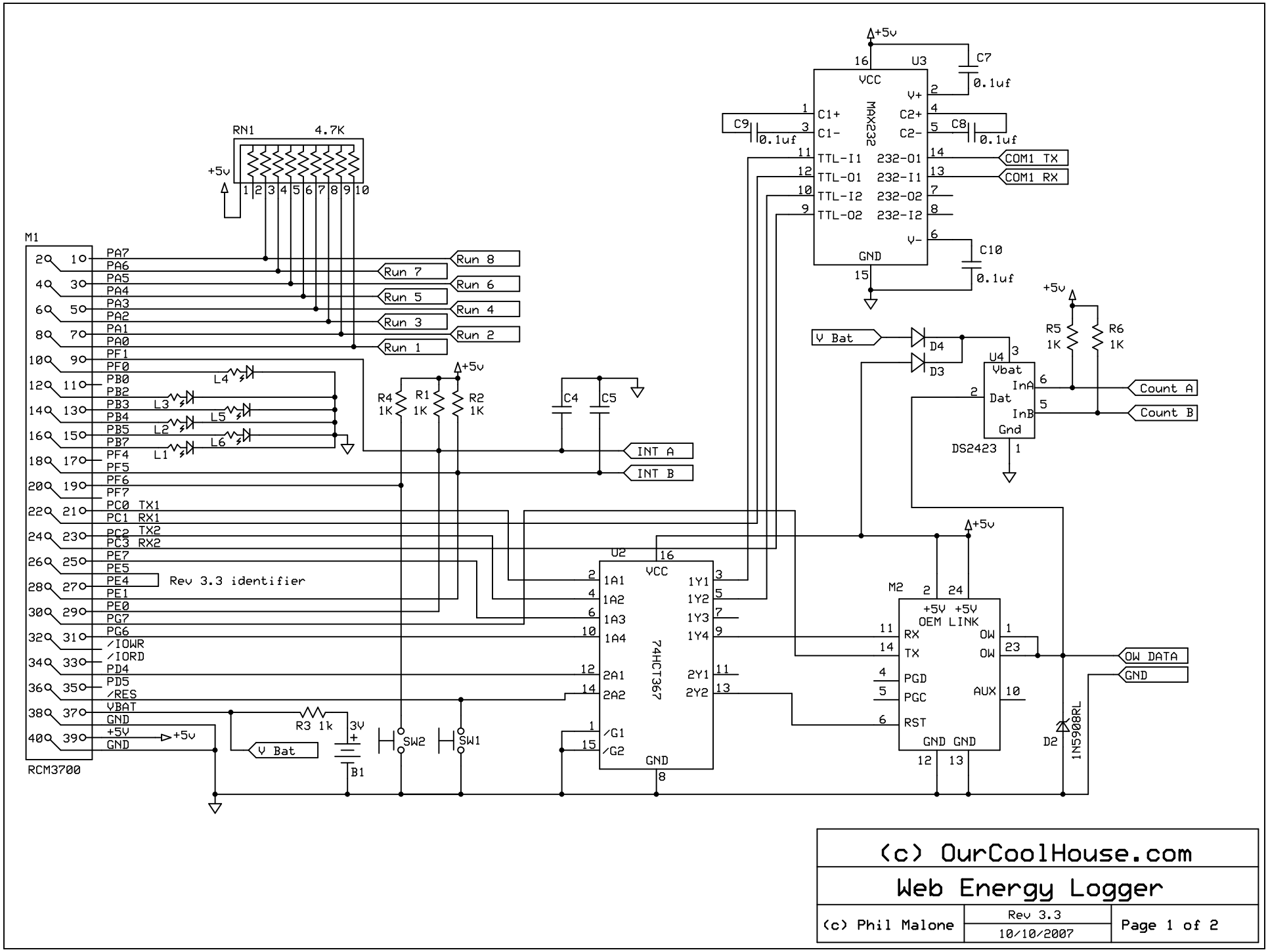

(c) OurCoolHouse.com

Web Energy Logger

(c) Phil Malone	Rev 3.3 10/10/2007	Page 1 of 2